Standard Doc.	PLASTIC FILM CHIP CAPACITOR TYPE ECWU(X)	Clsf. 28-76
Product Specifications		No. 1-28
		Revision Code R1
		1/17 P.

1. SCOPE	This specification covers the requirement for metallized polyethylene naphthalate dielectric fixed chip capacitor for use in electronic equipment.	
2. PRODUCT NAME	Plastic film chip capacitor Type **ECWU(X)**	
3.PRODUCT RANGE	Operating temperature range	-55 ˚C to+105 ˚C [Including temperature-rise on element surface]
	Rated voltage	100VDC (1)
	Capacitance range	0.001 μF~ 0.01 μF
	Capacitance tolerance	±5 %(J)
4. CONDITIONAL STANDARD TEST	The test shall be conducted at a temperature of from 15˚C to 35˚C, a relative humidity of from 45 % to 75 %. However the test shall be conducted at a temperature of 20 ˚C±2 ˚C, a relative humidity of 65 %±5 %, when doubt is entertained about judgment.	
5. SOLDERING METHOD	Reflow method only	
6. CONSTRUCTION	The capacitor has a non-inductive construction, stacked with metallized polyethylene naphthalate dielectric. The capacitor has outer electrode on both sides.	

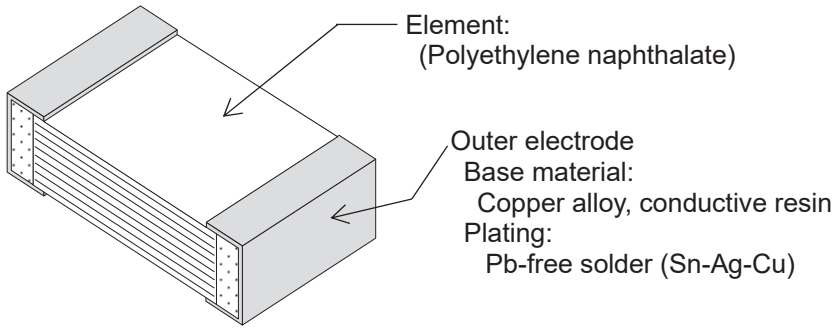

7. DIMENSIONS	As specified in the individual drawing.
8. APPEARANCE	Plating of outer electrode shall be proper enough to be soldered.

9. CHARACTER

No.	Item	Performance	Testing method
1.	Withstand voltage	Between terminals: Nothing abnormal shall be found, when applied voltage of 150 % of the rated voltage for 1 min or 175 % of rated voltage for 1 s to 5 s. (The capacitor shall be applied the voltage through 2 kΩ or more when charge and discharge.)	JIS C 5101-23 4.3.1 IEC 60384-23 4.3.1
2.	Insulation resistance	Between terminals : 3000 MΩ or more When the reading of measuring instrument becomes steady at a value after applying a DC voltage of 100 V± 5 V for 1 min ± 5 s, at 20 ˚C±2 ˚C.	JIS C 5101-23 4.3.4 IEC 60384-23 4.3.4
3.	Capacitance	Within a range of specified value. (Measured at a frequency of 1 kHz± 0.2 kHz, at 20 ˚C ±2 ˚C and a voltage of 5 V or less.)	JIS C 5101-23 4.3.2 IEC 60384-23 4.3.2

No.	Item	Performance	Testing method
4.	Dissipation factor	1.0 % or less (Measured at a frequency of 1 kHz± 0.2 kHz, at 20 ˚C ± 2 ˚C and a voltage of 5 V or less.)	JIS C 5101-23 4.3.3 IEC 60384-23 4.3.3
5.	Connection	The connection of the element shall not open even instantaneously when applied a voltage of 100 mV peak or less and applied light force.	
6.	Vibration proof	The capacitor shall be mounted on the PC board, and the following vibration shall be applied to the capacitor. Range of vibration frequency 10 Hz to 55 Hz total amplitude 1.5 mm, rate of frequency vibration to be such as to vary from 10 Hz to 55 Hz and return to 10 Hz in about 1 min and thus repeated. Thus shall be conducted for 2 h each (total 6 h) in 3 mutually perpendicular directions. The connection shall not get short-circuit or open when examined the connection of the element in compliance with the previous item (connection of element) during the last 30 min of the test.	(According to IEC 60384-1 [JIS C 5101-1] 4. 17) Sweep : 10 Hz ～ 55 Hz ～ 10 Hz (1 min)
7.	Soldering Property	The terminal shall be immersed in methanol solution of resin (about 25 %) and the terminal shall be immersed in the solder bath at a temperature of 255 ˚C± 5 ˚C for 2.5 s± 0.5 s. Composition of test solder: Sn-Ag-Cu. After test immersion, the solder shall be slicked to more than 90 % in the surface of the electrodes. 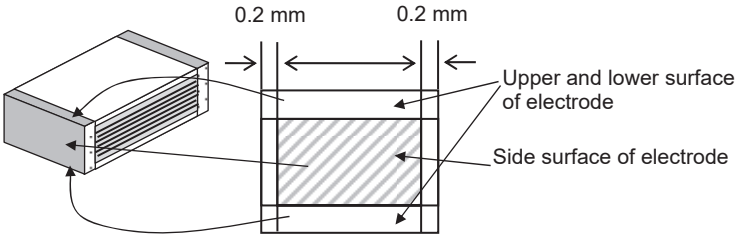 Development chart of electrode	JIS C 5101-23 4.7 IEC 60384-23 4.7

No.	Item	Performance	Testing method
8.	Moisture Resistance(I)	The capacitor under test shall be put in the testing oven and kept at condition of the temperature at 40˚C± 2˚C and the relative humidity at 90% to 95% for 1000 h +48/-0 h and then shall be let alone at ordinary condition for 1.5 h± 0.5 h. After the test, the capacitor shall be satisfied with the following performance. Appearance : No remarkable change. Withstand voltage : Between terminals Nothing abnormal shall be found, when applied a voltage of 130 % of the rated voltage for 1 min. (The capacitor shall be applied the voltage through 2 kΩ or more when charge or discharge.) Insulation resistance : Between terminals 100 MΩ or more Change rate of capacitance : Within +8/-5 % of the value before the test. Dissipation factor : 1.5 % or less (at 1 kHz)	JIS C 5101-23 4.10 IEC 60384-23 4.10
9.	Moisture Resistance(II)	The capacitor under test shall be put in the testing oven and kept at condition of the temperature at 60˚C± 2˚C and the relative humidity at 90% to 95% for 500 h +24/-0 h and then shall be let alone at ordinary condition for 1.5 h± 0.5 h. After the test, the capacitor shall be satisfied with the following performance. Appearance : No remarkable change. Withstand voltage : Between terminals Nothing abnormal shall be found, when applied a voltage of 130 % of the rated voltage for 1 min. (The capacitor shall be applied the voltage through 2 kΩ or more when charge or discharge.) Insulation resistance : Between terminals 10 MΩ or more Change rate of capacitance : Within ±10 % of the value before the test. Dissipation factor : 2.0 % or less (at 1 kHz)	JIS C 5101-23 4.10 IEC 60384-23 4.10

No.	Item	Performance	Testing method
10.	Moisture resistant loading(I)	The capacitor under test shall be applied the rated voltage continuously for 1000 h +48/-0 h in the testing oven and kept at condition of the temperature at 40 ˚C±2 ˚C and the relative humidity at 90 % to 95 % and then shall be let alone at ordinary condition for 1.5 h±0.5 h. After the test, the capacitor shall be satisfied with the following performance. Appearance : No remarkable change. Withstand voltage : Between terminals Nothing abnormal shall be found, when applied a voltage of 130 % of the rated voltage for 1 min. (The capacitor shall be applied the voltage through 2 kΩ or more when charge or discharge.) Insulation resistance : Between terminals 100 MΩ or more Change rate of capacitance : Within +8/-5 % of the value before the test. Dissipation factor : 1.5 % or less (at 1 kHz)	JIS C 5101-23 4.10 IEC 60384-23 4.10
11.	Moisture resistant loading(II)	The capacitor under test shall be applied the rated voltage continuously for 500 h +24/-0 h in the testing oven and kept at condition of the temperature at 60 ˚C±2 ˚C and the relative humidity at 90 % to 95 % and then shall be let alone at ordinary condition for 1.5 h±0.5 h. After the test, the capacitor shall be satisfied with the following performance. Appearance : No remarkable change. Withstand voltage : Between terminals Nothing abnormal shall be found, when applied a voltage of 130 % of the rated voltage for 1 min. (The capacitor shall be applied the voltage through 2 kΩ or more when charge or discharge.) Insulation resistance : Between terminals 10 MΩ or more Change rate of capacitance : Within ±10 % of the value before the test. Dissipation factor : 2.0 % or less (at 1 kHz)	JIS C 5101-23 4.10 IEC 60384-23 4.10

No.	Item	Performance	Testing method
12.	Moisture resistant loading(III)	The capacitor under test shall be applied the rated voltage continuously for 500 h +24/-0 h in the testing oven and kept at condition of the temperature at 85 ˚C±2 ˚C and the relative humidity at 85 % +2/-5 % and then shall be let alone at ordinary condition for 1.5 h±0.5 h. After the test, the capacitor shall be satisfied with the following performance. Appearance : No remarkable change. Withstand voltage : Between terminals Nothing abnormal shall be found, when applied a voltage of 100 % of the rated voltage for 1 min. (The capacitor shall be applied the voltage through 2 kΩ or more when charge or discharge.) Insulation resistance : Between terminals 10 MΩ or more Change rate of capacitance : Within ±10 % of the value before the test. Dissipation factor : 2.0 % or less (at 1 kHz)	JIS C 5101-23 4.10 IEC 60384-23 4.10
13.	High temperature loading	The capacitor under test shall be applied the voltage of 125 % of rated voltage through a series-connected resister of from 20 Ω to 1000 Ω per 1 V, continuously for 1000 h +48/-0 h in the testing oven and kept at condition of the temperature at +105 ˚C±2 ˚C and then shall be let alone at ordinary condition for 1.5 h±0.5 h. After the test, the capacitor shall be satisfied with the following performance. Appearance : No remarkable change. Insulation resistance : Between terminals 1000 MΩ or more Change rate of capacitance : Within +1/-6 % of the value before the test. Dissipation factor : 1.1 % or less (at 1 kHz)	JIS C 5101-23 4.11 IEC 60384-23 4.11
14.	Heat Resistance	The capacitor shall be stored a temperature of +105 ˚C±2 ˚C for 2 h +1/-0 h. Insulation resistance : Between terminals Between terminals: 900 MΩ or more Change rate: Within +3/-4 % of the value before the test.	JIS C 5101-23 4.9.2 IEC 60384-23 4.9.2
15.	Cold Resistance	The capacitor shall be stored a temperature of -55 ˚C±2 ˚C for 2 h +1/-0 h. Change rate: Within +1/-3 % of the value before the test.	JIS C 5101-23 4.9.4 IEC 60384-23 4.9.4

No.	Item	Performance	Testing method
16.	Soldering Heat Resistance	1. Reflow method Please be punctual for the 'Period of soldering from opening dry pack'(See page 13) Test condition of the reflow oven shall be adjusted that maximum temperature of the capacitor surface shall be 247 ˚C±3 ˚C. (See Fig. 1.) After the test, the capacitor shall be let alone at ordinary temperature and humidity for 1 h± 0.5 h. After this, the capacitor shall be satisfied with the following performance. 2. Soldering iron method The soldering iron of a 30 W shall be used and the temperature of the soldering iron shall be adjusted at 250 ˚C±10 ˚C. The soldering iron together with a solder wire of 1 mm diameter shall be put to each outer electrode of the capacitor for 3.5 s±0.5 s. After this, the capacitor shall be satisfied with the following performance. Appearance : No remarkable change. Withstand voltage : Between terminals Nothing abnormal shall be found, when applied a voltage of 150 % of the rated voltage for 1 min. (The capacitor shall be applied the voltage through 2 kΩ or more when charge or discharge.) Insulation resistance : Between terminals 1000 MΩ or more Change rate of capacitance : Within ±5 % of the value before the test. Dissipation factor : 1.1 % or less (at 1 kHz)	JIS C 5101-23 4.6 IEC 60384-23 4.6

No.	Item	Performance	Testing method
17.	Temperature cycle	The capacitor under the test shall be kept in the testing oven and kept at condition of the temperature of -55 ˚C±3 ˚C for 30 min±3 min. After this, the capacitor shall be let alone at the ordinary temperature for 3 min or less. After this, the capacitor under the test shall be kept in the testing oven and kept at condition of the temperature of +105 ˚C± 3 ˚C for 30 min± 3 min. Then the capacitor shall be let alone at the ordinary temperature for 3 min or less. This operation shall be counted as 1 cycle, and it shall be repeated for 5 cycles successively. After the test, the capacitor shall be let alone at the ordinary condition for 1.5 h±0.5 h, and shall be satisfied with the following performance. Appearance : No remarkable change. Insulation resistance : Between terminals 1000 MΩ or more Change rate of capacitance : Within +1/-5 % of the value before the test. Dissipation factor : 1.1 % or less (at 1kHz)	JIS C 5101-23 4.8 IEC 60384-23 4.8
18.	Robustness of capacitor body	The equipment shall permit pressurizing. Apply a force to the center of specimen, using a pressurizing as shown in the drawing. The pressure shall be 5 N±0.5 N, and the holding duration, 10 s±1 s. 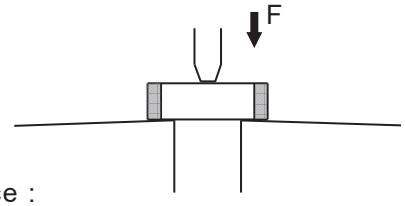 Appearance : No remarkable change.	

No.	Item	Performance	Testing method
19.	Adhesion of electrode	Examine, with a magnifier of magnification of 10, the appearance of specimen. As shown in the following figure, the force of 5 N±0.5 N is applied for 10 s±1 s without a shock to the capacitor mounted on PCB. Land dimensions and soldering conditions are recommended one, especially thickness of solder paste is 0.15 mm. After the test, use magnifier of magnification of 10, and check for cracks of soldering position. Appearance No remarkable change applied	JIS C 5101-23 4.4 IEC 60384-23 4.4
	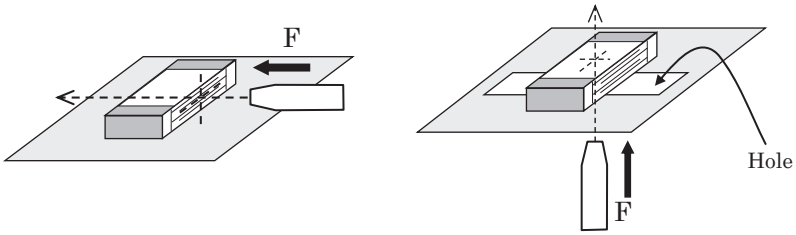		
20.	Resistance of Board to bending	The bending stroke shall be 1 mm. Pressurizing shall be carried out at the rate of 1 mm/s. After reaching the specified bending, keep it for 5 s±1 s. After the test no breaking of the terminal shall be found.	JIS C 5101-23 4.5 IEC 60384-23 4.5

Fig.1 Standard surface temperature curve of the capacitor for reflow method
Please be punctual for the 'Period of soldering from opening dry pack' (see page 13) strictly.

TEST CONDITION

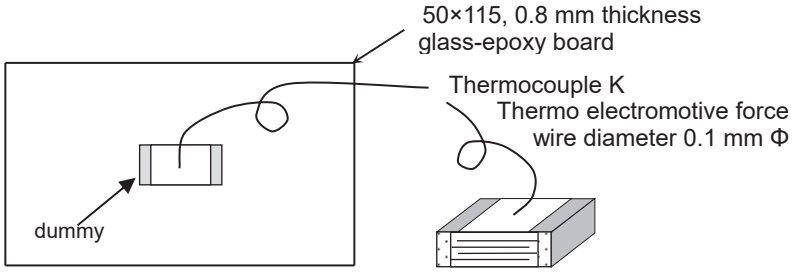

(Attach thermocouple on the parts top surface.)

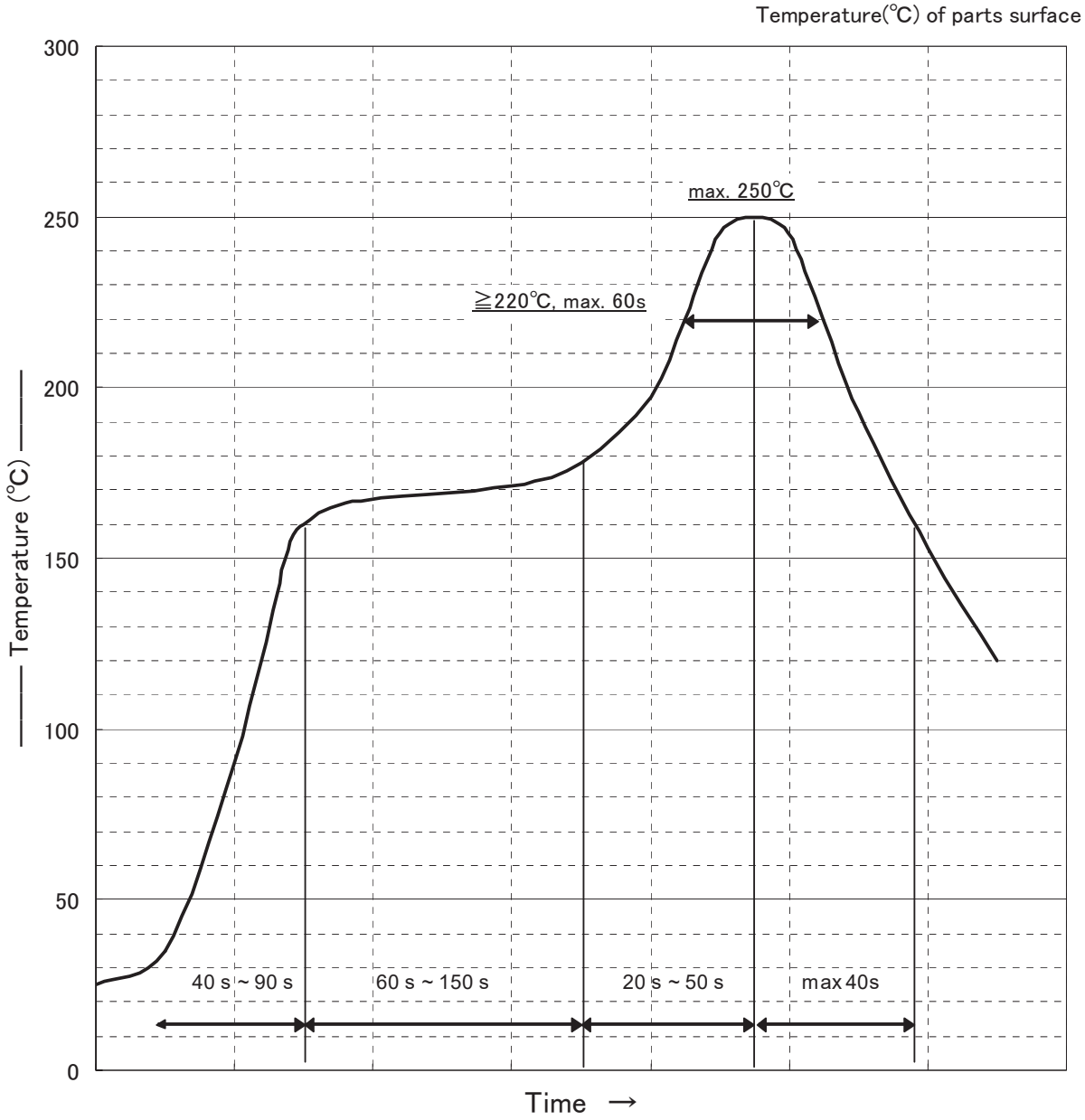

10.⚠Caution about safety in use

I. Operating range (voltage, current, operating temperature)

Use the capacitor within the specified limits listed below ((1) to (4)). Over rated conditions might cause deterioration, damage, smoke and fire. Do not use capacitor beyond range of the condition.

(1) Permissible voltage

- Rated voltage of this product is DC 100 V. Use the capacitor within rated voltage.
- When used in AC applied circuit, less than 40 V(rms) should be applied. When used in a high frequency, less than 40V(rms) should be applied and current applied should be less than the value of permissible current in Fig.2. Not to be in connected directly to Primary or AC line.
- Use the peak of pulse voltage applied the capacitor within the DC rated voltage.

(2) Permissible current

- The permissible current must be considered by dividing into pulse current (peak current) and continuous current (rms current). When using, therefore, make sure the both current are within the permissible values.
  In the case that a continuous current value is able not to be measured, use the capacitor within 7.5 ˚C as the inherent temperature rise confirmed by the measuring method show in page 16.
- Continuous current should be within specified figure in Fig.2. Contact us when the waveforms are totally different from the sine wave.
- Pulse current should be within the figures calculated by Tab. 1. Use within 10000 cycles of pulse current. When pulse current applied more than 10000 cycles, please consult us before use.

(3) Operating temperature range

- It must be noted, however the operating temperature range is the surface temperature of the capacitor, not the ambient temperature of the capacitor.
- In actual use, make sure the sum of the ambient temperature + own temperature rise value (Within specified value), that is the capacitor surface temperature is within the rated operating temperature range.
- If there is cooling plate of the other part of any resistance heated to high temperature near the capacitor, the capacitor may be locally heated by the radiation heat, exceeding the operating temperature range, and smoking or firing may be caused. Check the capacitor surface temperature at the heat source side.

(4) For safety handling, check worst conditions within the specification range.

Protective means for safety should be provided in case the pulse and rms current may exceed the permissible values due to abnormal action of elsewhere in the circuit.
Please consult in advance when capacitors are connected in parallel to supplement capacitance.

II. Recommendable land size

For designing land size, refer to the following recommendable land size.

unit: mm

Size code \ Dimensions	A	B	C
H2,H3	1.8	3.6	1.4
G2,G3	1.8	3.6	2.3

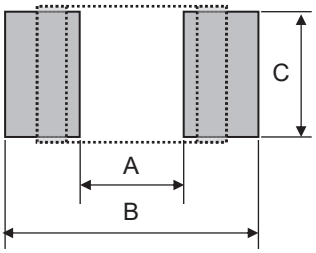

<Note>

- A recommended solder paste thickness is between 0.10 mm and 0.15 mm.

III. Design of P. W. B.

Do not use ceramic and metal board, because they have a large thermal expansion coefficient which is different from that of this capacitor, which are liable to cause a deterioration of thermal cycle endurance.

IV. Soldering

(1) Soldering method: This capacitor shall be used in reflow method only.

(2) Recommendable reflow soldering conditions

Recommendable reflow condition (parts surface)

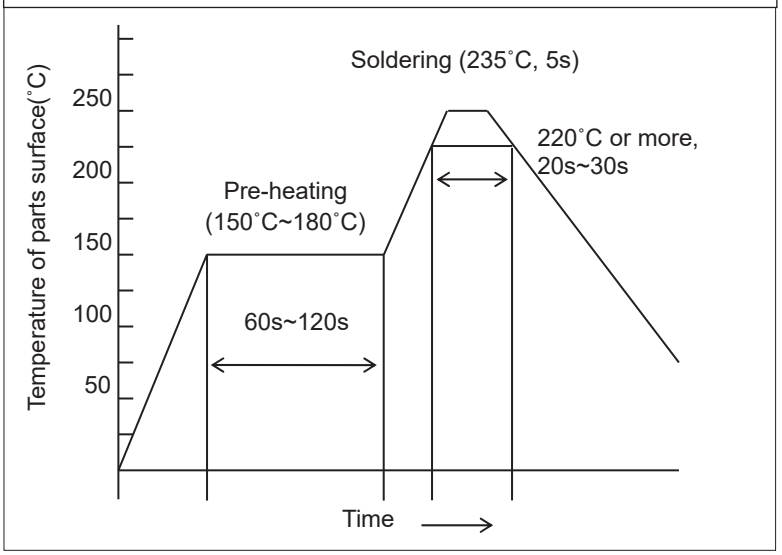

<Note>

- The above figure is recommendable conditions.
- Maximum soldering frequency shall be two times. Please solder the second soldering after the temperature of the capacitor body will return to the room temperature.
- When further conditions except for the above, please obey the following conditions. Consult us before using when further condition shall be required except the following.
  <Reflow> within Fig.1.
- VPS's heat effect to the capacitor is different in the reflow method, consult with our engineering section in advance when the capacitor is mounted in VPS.

(3)Soldering conditions used in soldering iron

Temperature	Soldering time	Other conditions
260 ˚C maximum	4.0 s maximum	Power of soldering iron:30 W Pre-heating is not needed

- In the case of sketch (1)
  Put a soldering iron to an electrode (for less than 4 s) with solder like sketch (1) shows.
  *Put soldering iron lightly.
  *Soldering is allowed as one side by one side (without interval) or as both sides at the same time.

- In the case of sketch (2)
  After a solder is melted on a soldering iron like sketch (2), put them to an electrode. (for less than 4 s)
  *Put soldering iron lightly.
  *Soldering is allowed as one side by one side (without interval) or as both sides at the same time.

Sketch (1)

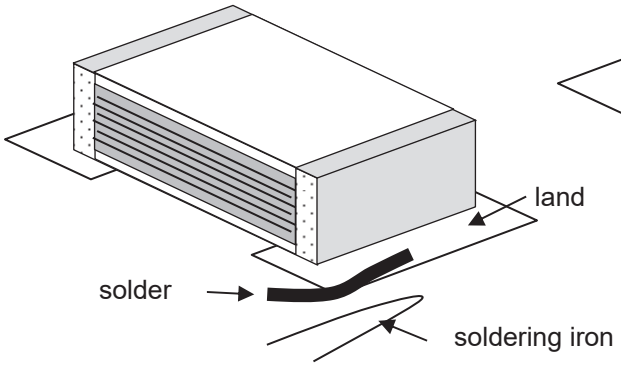

Sketch (2)

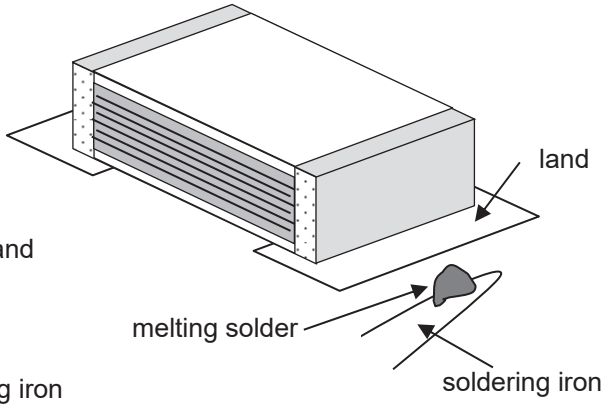

<Note>

- Soldering frequency shall be maximum two times. Solder after capacitor body temperature returned for normal temperature soldering of a second time.
- The above condition shall be applied also on re-working after reflow soldering. Readjust with once after reflow soldering.
- When measuring temperature, it shall be operated with solder on soldering iron.
- Please pay attention to the soldering iron not to touch a capacitor body (except electrode), especially not to touch cut edge side.
- Consult with our engineering section in advance when require further conditions except for the above.

(4)Others

- Solder a heat record of the case which soldering in others method with above-mentioned within (2) and (3).
- It is too much heat record that solders or solders removal this product or the other part which approaches this product using hot air – blow. Consult us before use.
- Do not to use soldering this product by Light beam and laser beam. If used these method, consult us before use.
- Consult us before use, when soldering in other method.

V. Warning about solder paste

- Solder paste shall be used which contains halogen with less than 0.1 wt%.(In case of reflow soldering and using soldering iron.)
- Consult with our engineering section in advance when using flux with more than 0.1 wt% of the halogen content.

VI. Cleaning

(1)Case of wash free

Please use a recommended flux, like low residue flux ULF-500VS or inactivated flux AM-173.

(2)Applicable solvent

Type	Cleaner	Manufacturer
Alcohol	IPA(isopropyl alcohol)	General industrial use

(3)Cleaning method

Item \ Conditions	Temperature	Period
Immersion	Room temperature	Within 5 min
Vaporized cleaning	less than 50 ˚C	Within 5 min
Ultrasonic cleaning	less than 50 ˚C	Within 5 min

<Note>

- Do not wash it with water.
- When washing right after soldering, make sure the capacitor surface temperature is lower than 60 ˚C.
- It is necessary to remove cleaner from P.W.B. by drying thoroughly after cleaning.
- Cleaner shall contain halogen with less than 0.1 wt%, because in case of cleaning after mounting, halogen in flux will dissolve into cleaner.
- Consult with our engineering section in advance when further information for cleaning solvent, conditions are required.

VII. Storage and preservation

- It must be noted that the solderability of the external electrode may deteriorated when stored in an atmosphere filled with moisture, dust, or a reactive oxidizing gas (hydrogen chloride, hydrogen sulfide, sulfuric acid) .
- Avoid location with particularly high temperature and high humidity, and store in conditions not exceeding at temperature 35 ˚C and relative humidity 85 %.Storage period limit is 6 months (use within 6 months).
- The unpacked products shall be kept in dry pack together of well-dried silica-gel (3 g, 4 packs) or be kept in storage conditioned at a temperature less than 20 ˚C, a relative humidity less than 50 %. Storage period limit is half year (use within half year).
- Consult with our engineering section in advance when require further conditions for the above..

VIII. Period of soldering from opening dry pack.

- These capacitors are sensitive to the moisture. After opening dry pack, the products should be kept in conditions a temperature less than 25 ˚C, a relative humidity less than 70 % and it should be soldered within 72 h.
- In case of over 72 h, should be kept in dry pack together of well-dried silica-gel (3 g, 4 packs) or be kept in storage conditioned at a temperature less than 20 ˚C, a relative humidity less than 50 %.
- Consult with our engineering section in advance when further information for the above.

IX. Operating environment

- Consult us when used for a long period in humid environments, because characteristic deterioration as low insulation resistance and oxidized evaporated internal electrode may occur due to humidity absorbed with the passing of the time.
- Avoid to use in a place of corrosive and oxidizing gas atmosphere (hydrogen chloride, hydrogen sulfide, sulfuric acid etc.)
- Avoid use under the environment where water is generated to deteriorated the characteristic of the capacitor when the adhesion of water (drop of water etc.) is generated in the capacitor.
- No dust should be permitted to remain on the surface of the product as this may cause electrical leakage.

X. Capacitance change due to humidity absorption

In environment with humidity change, capacitance of this capacitor changes (increases and decreases).
Because capacitor absorbing and dis-absorbing due to humidity of environment.
Consult with our engineering section detail of this capacitance change.
[For example: The data shown below is capacitance change from dry condition to 40 ˚C, 95 %(relative humidity) condition.]

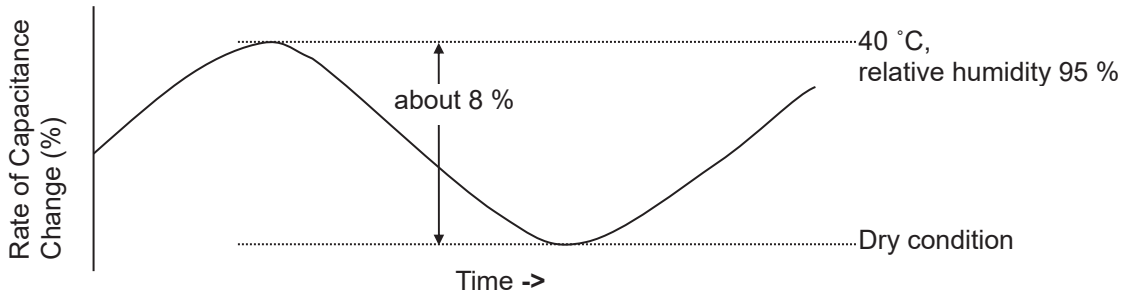

XI. In case of using resin for fixing the chip parts

In case of using resin for fixing the chip parts, inquiring in advance of our engineering section is recommended.

XII. Resin coating

When capacitors are coated or embedded with resin, inquiring of our engineering section is recommended.

XIII. Handling of a element

When handle an element of the capacitor with tweezers, use tweezers made of resign and applied stress should be less than 5 N.

XIV. Stress, damage

Please pay attention to the following points, when stress or damage is applied to the capacitor it may become the cause of malfunction.

- •Do not apply more than 5N as pull, stress and pressure etc.
- •Do not apply strong stress to cut edge side of the capacitor and not give the damage of scratch etc.
- •Chip mounting consideration

In mounting the capacitors any bending and expanding force against them shall be kept minimum to prevent them from bending damaged or cracked, following precautions and recommendations shall be observed carefully in the process.

(1)Motion of vacuum nozzle or clamp shall be adjusted so that the capacitors shall not be damaged by pushing force.
(2)Maximum stroke of the nozzle shall be adjusted to avoid damage so that the maximum bending of PCB becomes not too much.
(3)The PCB shall be supported by means of adequate supporting pins.

XV. Appearance

- The gap among a film about 0.1 mm on the cut edge side may occur by structure and process. But there is not a problem in reliability.
- We make assurance double sure about quality of the appearance. If it obstructs the reliability and performance of the electronic equipment requested, we exchange the appearance boundary sample.

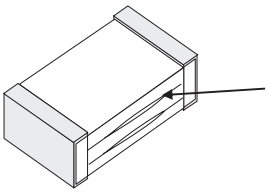

XVI. Singular using

This capacitor is generally surface mount device. Do not use singular using.

Tab.1 Permissible pulse current (Max.10000 cycles)

•Pulse current applied to this capacitor should be used within permissible pulse current (Max.10000 cycles) shown in table.

•The pulse current = C(μF) × dV/dt value(V/μs)

•Permissible pulse current may be lowered due to temperature change (heat shock) after mounting. Permissible pulse current shown in table is supposed in case of use at a temperature from –20 ˚C to 60 ˚C. In case of pulse current is over the specified table, inquire of our engineering section.

Capacitance (Rated Capacitance: μF)		dV/dt(V/μs)
102	(0.0010)	1000
122	(0.0012)	920
152	(0.0015)	830
182	(0.0018)	760
222	(0.0022)	690
272	(0.0027)	630
332	(0.0033)	570
392	(0.0039)	530
472	(0.0047)	480
562	(0.0056)	450
682	(0.0068)	410
822	(0.0082)	370
103	(0.010)	340

Measuring method of inherent temperature rise

As shown in the drawing, attach a thermocouple to the capacitor surface with adhesive, and measure the surface temperature and capacitor surface temperature while avoiding radiation heat from periph peripheral parts. At this time, use a thermocouple with small thermal capacity (Φ 0.1 T wire), and toa avoid heat release to the board, lift the parts to be measure from the board by using lead wire or the like, and install as shown in the drawing. To avoid effects of convention and wind, put the capacitorir into the box or the like, and measure in wind-free condition.

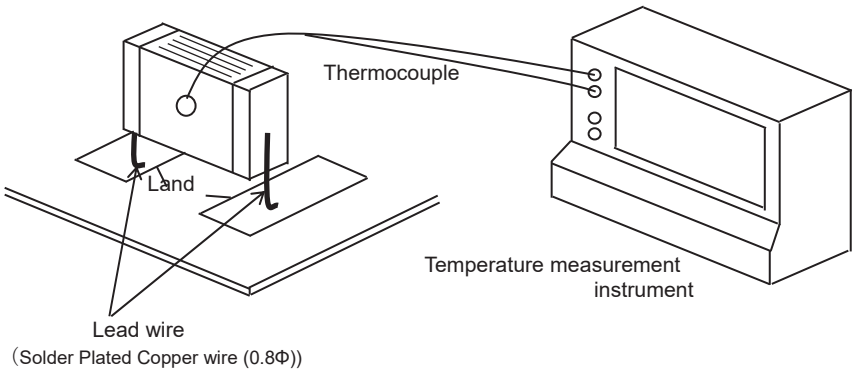

Fig.2 Permissible Current
Measuring condition ••• Sine wave