Panasonic
BUSINESS

Remote Laser Welding/Cutting Robot System

LAPRISS Series

Remote Laser Welding/Cutting Robot System

Laser Processing
Robot Integrated
System Solution

LAPRISS

Laser Processing Robot Integrated System Solution

Comes with Five Elements for Laser Welding

Laser oscillator, welding processes, software, trepanning head, and laser robot

Five Elements Integrated in Simple and Compact System!

Laser robot with trepanning head

Laser oscillator

- ●One controller directly controls the system*
  (laser oscillator, trepanning head, robot)
- ●No need to combine products of multiple manufacturers
- ●Service and maintenance of whole system

*For single robot system only

Feature 1 High-quality beam with high-output (4 kW) by direct diode laser

The laser oscillator is jointly developed with TeraDiode and uses wavelength beam combining (WBC) technology developed by MIT Lincoln Laboratory in the U.S.

●Low distortion & high-speed welding

High energy density allows low heat input welding.

●Lower running costs

Energy conversion efficiency is more than 3 times as high as LD pumped YAG laser, which reduces electricity costs.

Laser oscillator

Feature 2 Great condition tolerance

●Increased tolerance for gap and target point misalignment
(Unique Spiral process and Spinning process)

Effects of Spiral process

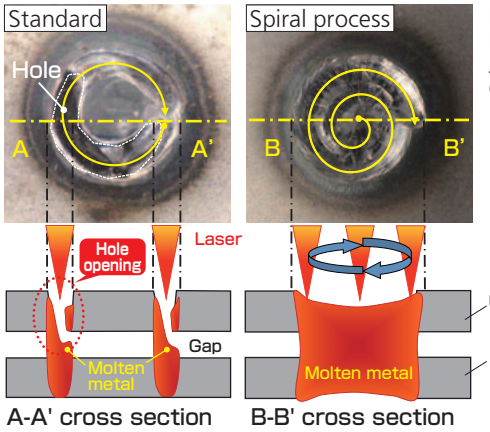

Material: Mild steel
Plate thickness: 0.8 mm
Joint: Lap
Gap: 0.5 mm

Effects of Spinning process

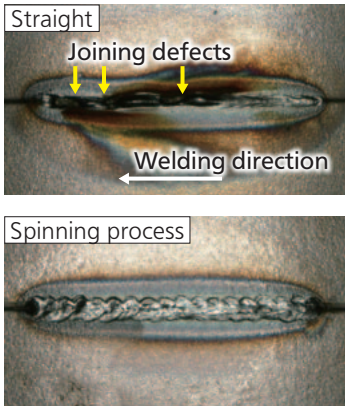

Material: Mild steel
Plate thickness: 0.8 mm
Joint: Butt
Gap: 0.2 mm
Target point misalignment: 0.4 mm

LAPRISS
Laser Processing Robot Integrated System Solution

Comes with Five Elements for Laser Welding

Integration into simple and compact system

Feature 3 Easy-to-use software exclusively for laser welding

Easy settings of weld conditions with Teach Pendant

Note: Screens are subject to change without notice.

Reduces parameter setting time.

●Easy programming (Trepanning pattern setting)
Just select welding pattern and enter its parameters.

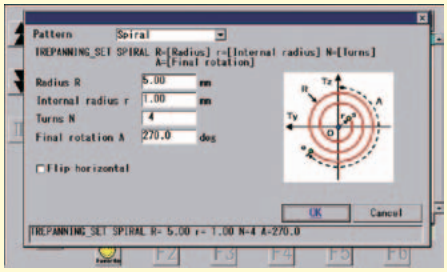

●Laser Navigation (Laser welding support)
Standard parameters are determined by entered conditions such as joint and plate thickness.

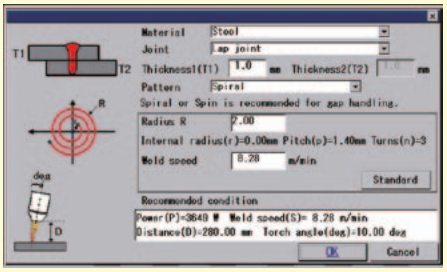

Notes: ・Parameters determined by Laser Navigation are guideline only and do not guarantee welding result.
・Consult us for material and processes available with Laser Navigation.

Feature 4 High functionality trepanning head — Compact, lightweight, and easy maintainability.

Weight 4.5 kg

●Lightweight head

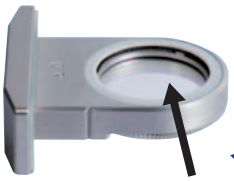

●Protection glass replaceable without tool (ALL41004)

Trepanning head

●265 mm
(distance from the end face of standard nozzle side)

●Jet nozzle for preventing spatter and fume intrusion

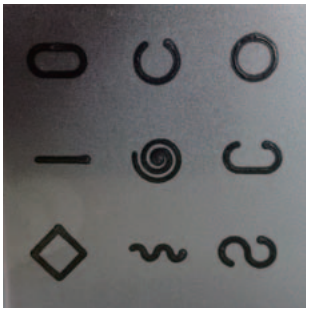

Trepanning patterns

●Specialized optical system
Nine trepanning patterns are standard for wide applications.

Feature 5 Compact robot specialized for laser welding

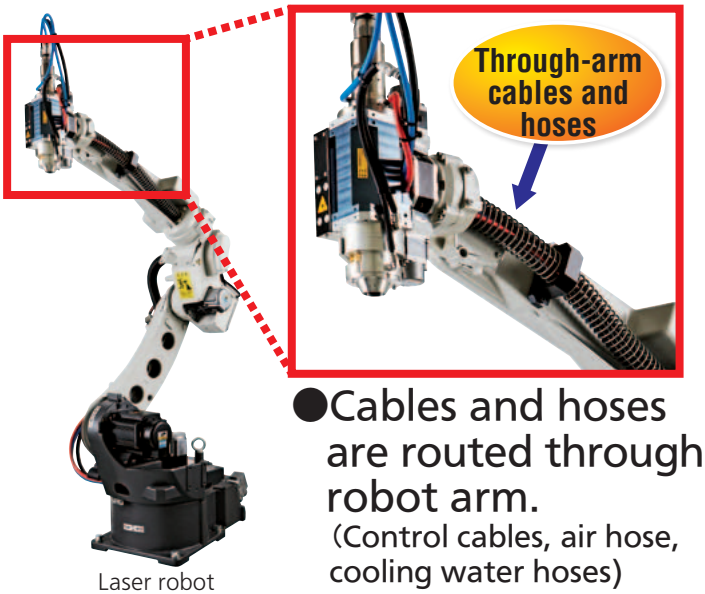

Laser robot

●Cables and hoses are routed through robot arm.
(Control cables, air hose, cooling water hoses)

Teach pendant

Controller

●All operations can be performed through teach pendant.
(Laser oscillator, trepanning head, robot)

LAPRISS

Laser Processing Robot Integrated System Solution

Weight Reduction, Design Freedom, Higher Rigidity, Shorter Cycle Times, Burn-Through Prevention, Low Distortion

Replacing Resistance Welding

1. Reduced cycle times

- One side penetration welding capability

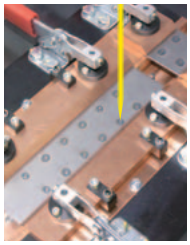

- High-speed head movement & wide radiation area

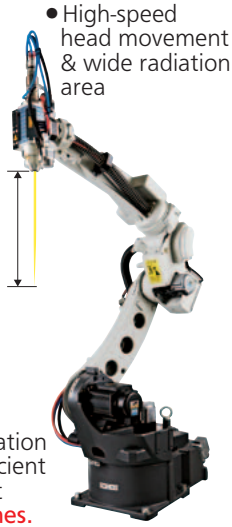

- One side penetration welding and efficient robot movement reduce cycle times.

2. Weight reduction & more design freedom

Resistance welding

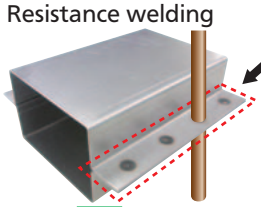

Elimination of flanges

Laser welding

- Elimination of flanges reduces weight.
- Narrow access capability increases design freedom.

3. Higher rigidity

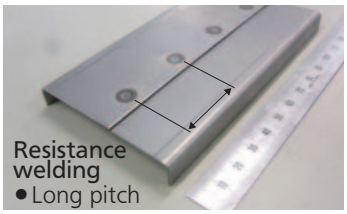

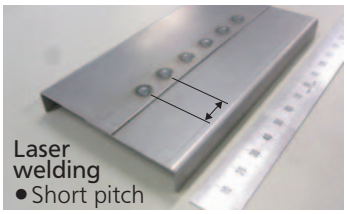

- No pitch limit with no shunt current unlike resistance welding, which allows more welding points and higher rigidity.

Laser welding achieves reduced cycle times, reduced weight, and increased design freedom.

Replacing Arc Welding

1. Reduced cycle times

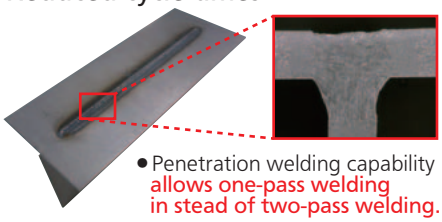

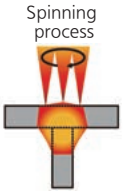

- Penetration welding capability allows one-pass welding in stead of two-pass welding.

2. Burn-through prevention and gap handling (thin plates)

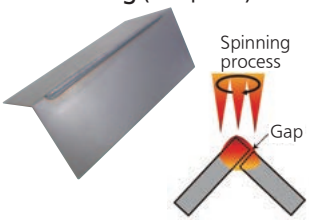

- Concentrated heat input allows optimum heat input, which is great for thin plates.

3. Low distortion

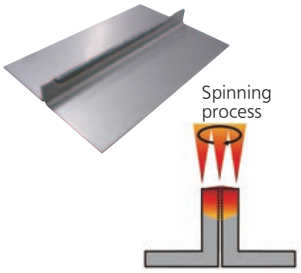

- Concentrated heat input suppresses total heat input.

Laser welding (Spinning process) achieves shorter cycle times, burn-through prevention, gap handling, and low distortion.

Application to Stainless Steel and Aluminum

Stainless Steel (SUS430)

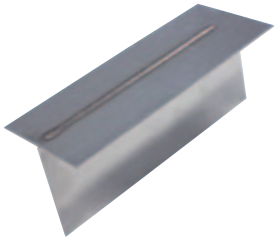

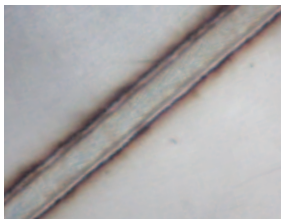

- Applicable to stainless steel with low heat conductivity

Aluminum (A5052)

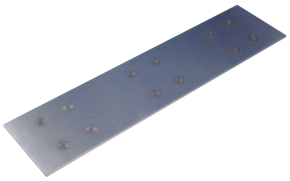

- Applicable to aluminum with low melting point and low viscosity

Aluminum (A1050)

- Applicable to aluminum with high thermal conductivity and low viscosity

High reflective materials are also supported. Application range of high-precision and high-speed laser welding has been extended.

Simple and compact. Panasonic proposes replacing resistance/arc welding with laser welding.

LAPRISS

Laser Processing Robot Integrated System Solution

Simple and compactly system integrated the elements for laser cutting!

Easy-to-use software exclusively for laser cutting

●Easy programming

Teach pendant

L_CUTTING_SET command

【Easy programming】
- Only selecting cutting pattern and entering parameters such as size etc. Drilling /Cutting processing can also be switched by parameters.

Circle | Oval | Rectangle

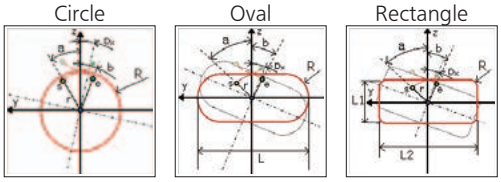

<Drilling> <Cutting>

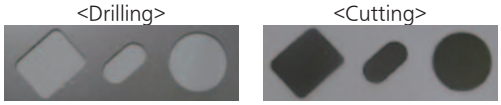

●Laser Navigation (Laser cutting support)

Laser Navigation

Standard condition is displayed by entering the type such as material or plate thickness.

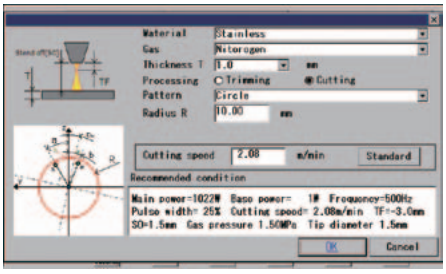

Notes: ・Parameters determined by Laser Navigation are guideline only and do not guarantee cutting result.
・Consult us for material and processes available with Laser Navigation.

The high trajectory cuttings by daughter arm

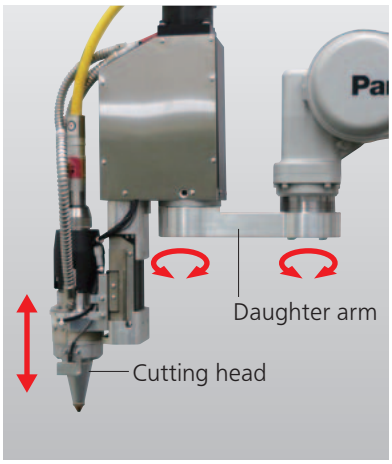

Mild steel cutting

Material: SPCC Thickness: t1.2
Output: 1.4 kw Speed: 3.5 m/min

Aluminum cutting

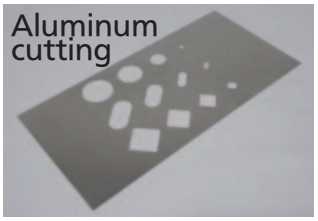

Material: A 5052. Thickness: t.2.0
Output: 3.0 kW. Speed: 4.5 m/min

Operating range of the daughter arm

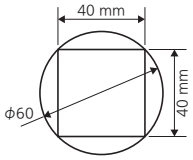

Item	size
Maximum diameter	60 mm
Maximum angle	40 mm
Vertical movement	±8 mm

Compact robot specialized for laser cutting

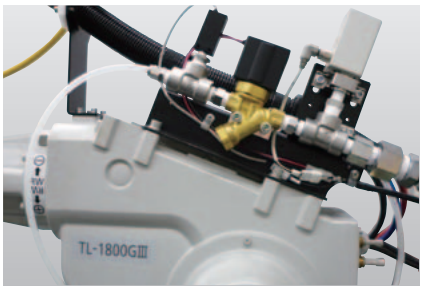

●One cable contains cabling and tubing.

(control cable of daughter arm + cooling water hose + assist gas hose, etc.)

●Installed the gas pressure detector as standard future.

●All operations can be performed through teach pendant.

(laser oscillator, daughter arm, robot.)

■Laser Robot Manipulator Specifications

Application		Welding		Cutting
Model		TM-1400	TM-1800	TL-1800
Type		Standard	Long arm	
Structure		6 axis articulated		
Payload		6 kg		8 kg
Maximum reach		1 437 mm	1 809 mm	1 801 mm
Minimum reach		404 mm	430 mm	383 mm
Working range		1 033 mm	1 379 mm	1 418 mm
Max. Motion Speed	RT (Rotating trunk)	225°/s	195°/s	195°/s
	UA (Upper arm)	225°/s	197°/s	197°/s
	FA (Forearm)	225°/s	205°/s	205°/s
	RW (Rotating wrist)	425°/s	425°/s	385°/s
	BW (Bending wrist)	425°/s	425°/s	375°/s
	TW (Twisting wrist)	629°/s	629°/s	300°/s
Position repeatability		±0.08 mm		
Motor	Total power	3 400 W	4 700 W	5 050 W
	Brakes	All axes		
Weight		170 kg	215 kg	215 kg

■Robot Controller Specifications

Model	GⅢ
Dimensions*	W 553 mm×D 550 mm×H 681 mm
Weight	60 kg
Memory capacity	40 000 points
Position control	Software servo control
External memory	One SD memory card slot and two USB ports on Teach Pendant
Control axes	6 axes simultaneously (Max. 27 axes)
Inputs and outputs	Inputs: 40 (Optionally expandable up to 2 048) Outputs: 40 (Optionally expandable up to 2 048)
Input power	3-phase, 200/220 VAC ± 20 VAC, 3 kVA, 50/60 Hz

*Teach pendant and connection cables not included.

■Laser Oscillator Specifications

Item		Laser oscillator
Model number		YL-F40AA2□□□
Rated output	kW	4
Center wavelength	nm	975
Dimensions (not including protrusions)	mm	W 900 x D 1 000 x H 1 350
Rated input	–	3-phase, 200 VAC ± 20 VAC, 18 kVA
Weight*	kg	530 (with 2-way beam switch)

*Mass maybe changed with the specifications or locations.

■Options

Item	Model number
Laser power checker	YL-H40AA1□□□
Line guide beam unit	WSLGU00027ZZ
Cross-jet nozzle unit	WSLGU00032ZZ
Shielding gas unit	WSLGU0000□ZZ
Dry air unit for oscillator	WSLWU00059ZZ
Dry air unit for robot	WSLWU00058ZZ
Dry air unit for robot (2 circuits use)	WSLWU00067ZZ

■Consumables

Item	Model number
Protection glass for welding	ALL41004
Shield unit (for welding)	WSLMU00008ZZ
Protection glass for cutting	WSLLL00004
Cutting tip (1.5 mm dia)	WSLGT00036
Cutting tip (2.0 mm dia)	WSLGT00037
Chip isolator	WSLZV00005

■Optional Chiller Unit Specifications

Manufacturer		SMC		Orion Machinery
Item		Chiller for oscillator	Chiller for robot	Chiller for oscillator and robot
Model number		WSLCU00□□□ZZ	WSLCU00□□□ZZ	WSLCU00□□□ZZ
Cooling capacity	kW	15.7	4.7/5.1 (50 Hz/60 Hz)	19.3
Dimensions (not including protrusions)	mm	W 954 x H 715 x D 1 420	W 377 x H 592 x D 1 011	W 1 100 x H 854 x D 1 700
Rated input	–	3-phase, 200 VAC(50 Hz), 200 to 230 VAC(60 Hz), 6.0 kVA	1-phase, 200 to 230 VAC(50/60 Hz), 1.7/2.2 kVA(50/60 Hz)	3-phase, 200 VAC, Allowable voltage range: ±10 %, 13.2 kVA
Weight	kg	215	69	390
Water tank actual capacity	L	42	5	100

LAPRISS Single Robot Standard System

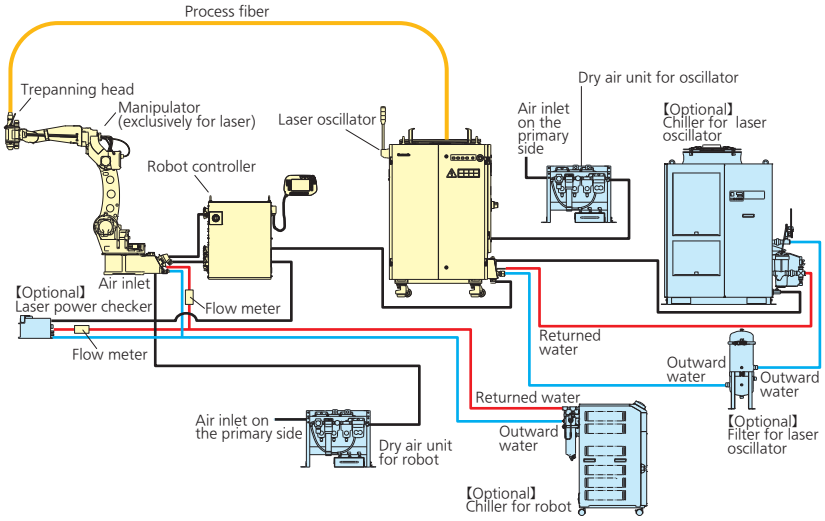

Components	Qty.	Remarks
Laser oscillator	1	
Laser oscillator	(1)	
Process fiber	(1)	
Laser robot (TM-1400GⅢ/TM-1800GⅢ)	1	• Head mounted • Flow meter supplied
Chiller unit	1	Optional
Chiller, filter for laser oscillator	(1)	
Chiller, filter for robot	(1)	
Laser power checker	1	Optional
Dry air unit for oscillator	1	Optional
Dry air unit for robot	1	Optional

Notes: • Air supplied to nozzle must be free from water or oil.
• Maximum allowable supply air pressure is 0.58 MPa (about 250 L/min).
• Set the air pressure to 0.4 MPa (180 L/min).

LAPRISS Dual Robot Standard System

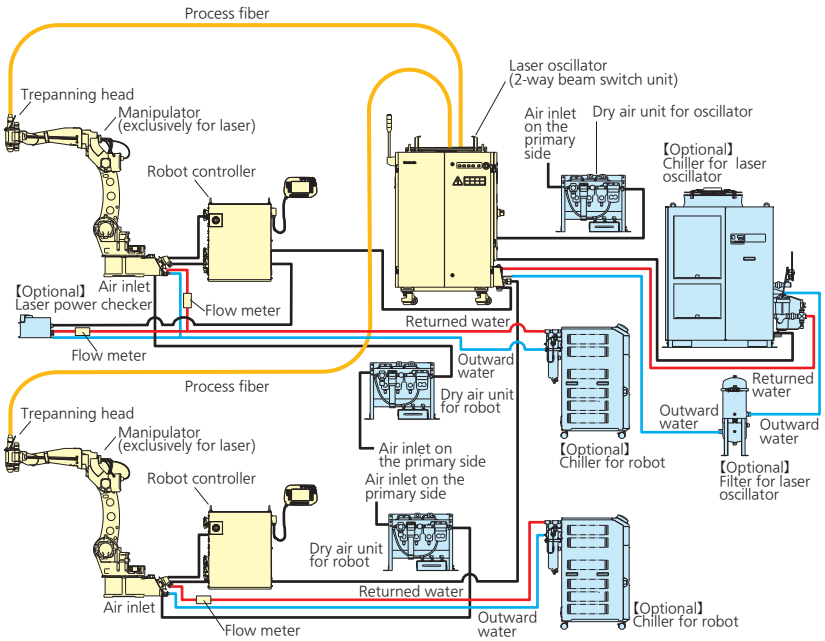

Components	Qty.	Remarks
Laser oscillator	1	
Laser oscillator	(1)	
beam switch unit	(1)	2-way, built-in
Process fiber	(2)	
Laser robot (TM-1400GⅢ/TM-1800GⅢ)	2	• Head mounted • Flow meter supplied
Chiller unit	1	Optional
Chiller, filter for laser oscillator	(1)	
Chiller, filter for robot	(2)	
Laser power checker	1	Optional
Dry air unit for oscillator	1	Optional
Dry air unit for robot	2	Optional

Notes: • Air supplied to nozzle must be free from water or oil.
• Maximum allowable supply air pressure is 0.58 MPa (about 250 L/min).
• Set the air pressure to 0.4 MPa (180 L/min).

LAPRISS Single Robot Standard System for Cutting

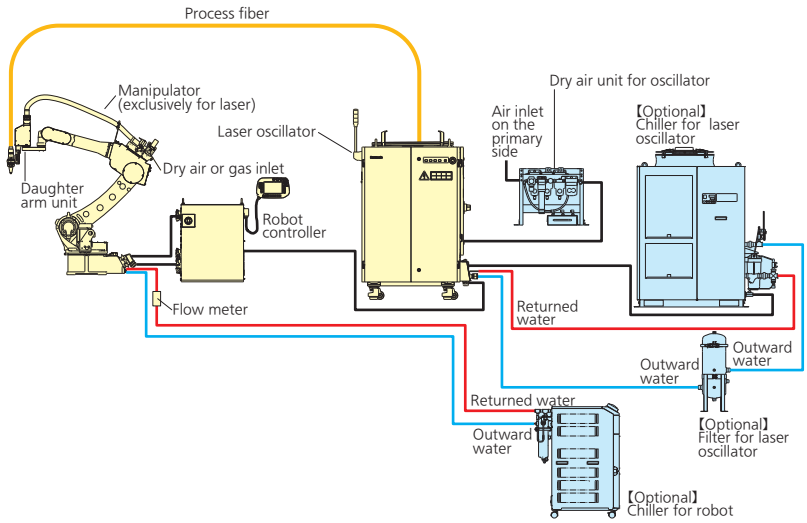

Components	Qty.	Remarks
Laser oscillator	1	
Laser oscillator	(1)	
Process fiber	(1)	
Laser robot (TL-1800GⅢ)	1	• Head mounted • Flow meter supplied
Chiller unit	1	Optional
Chiller, filter for laser oscillator	(1)	
Chiller, filter for robot	(1)	
Dry air unit for oscillator	1	Optional

Notes: • Air supplied to nozzle must be free from water or oil.

Dimensions & Working Range (Unit: mm) *Please contact our sales representative for the operating range of the point 0.

Welding robot

Standard Type
TM-1400

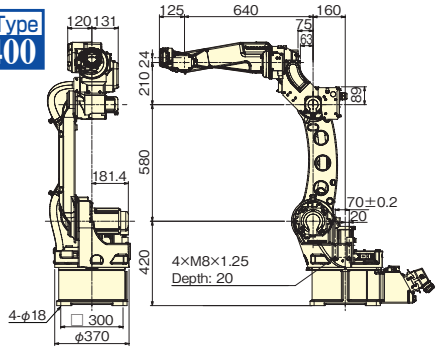

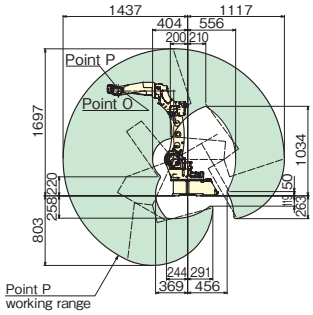

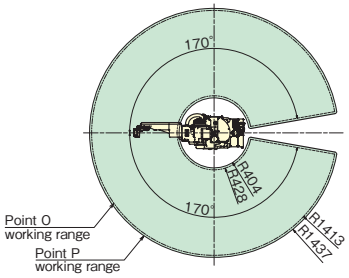

Long Type
TM-1800

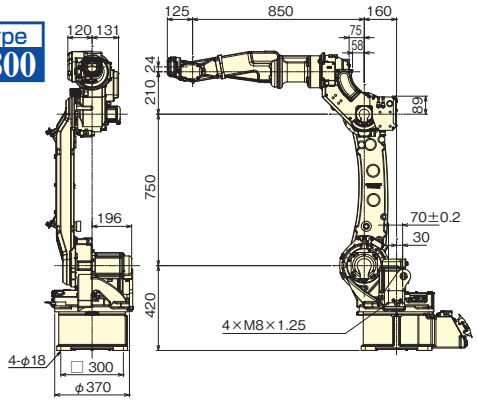

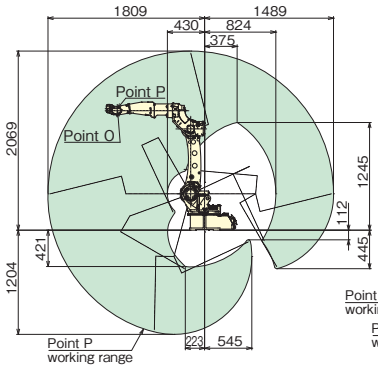

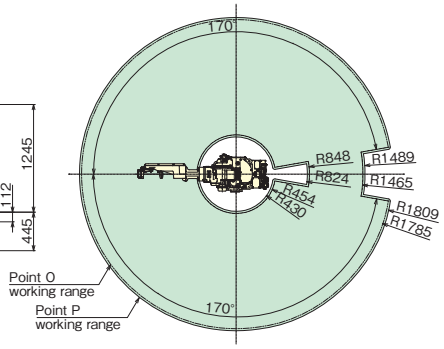

Cutting robot

Long Type
TL-1800

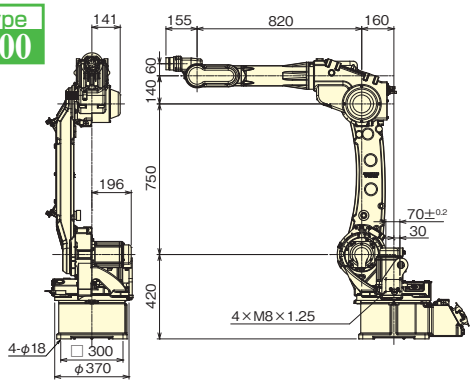

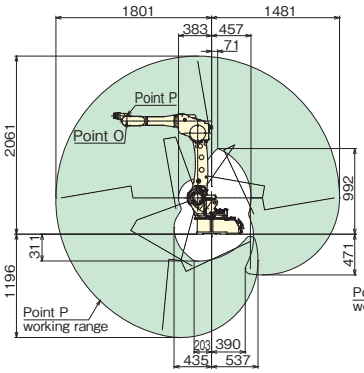

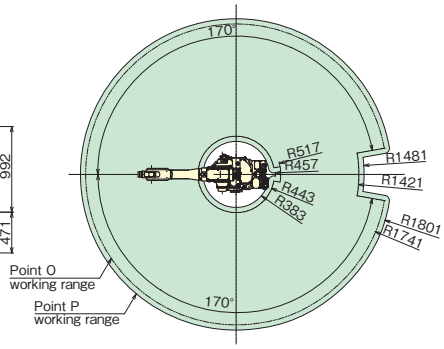

Safety precautions

- Before attempting to use any welding product always read the manual to ensure correct use.
- Lasers emitted by this laser oscillator are considered Class 4 according to IEC 60825-1:2014. Take safety measures.

Panasonic Corporation
Process Automation Business Division, Business Innovation Center
1-1,3-chome,Inazu-cho,Toyonaka,OSAKA 561-0854 Japan
TEL: 81-6-6866-8505 FAX: 81-6-6866-0709

Panasonic Smart Factory Solutions Co., Ltd.
Thermal Fabrication System Business Unit
http://www.panasonic.com/jp/company/psfs.html

Panasonic Welding Systems (Tangshan) Co., Ltd.
No.9 Qingnan Rd.,Tangshan New & Hi-Tech Industrial Park,
063020 Hebei, China
TEL:86-315-320-6060 FAX:86-315-320-6070
http://pwst.panasonic.cn

Panasonic Welding Systems India
Industrial Plot No.1, Village Bid Dadri, Jhajjar - 124103,
Haryana, India

Panasonic System Solutions Company of North America
1701 Golf Road, Suite 3-1200 Rolling Meadows, IL 60008 USA
TEL:1-847-637-9700 FAX:1-847-637-9601
http://www.panasonicfa.com

Panasonic Industry Europe GmbH
Jagenbergstr 11a, D-41468 Neuss Germany
TEL:49-2131-60899-0 FAX:49-2131-60899-200
http://eu.industrial.panasonic.com/

Panasonic Industrial Devices Sales (Thailand) Co., Ltd.
252/133 Muang Thai-Phatra Complex Building, 31st Fl.
Rachadaphisek Rd., Huaykwang, Bangkok 10320 Thailand
TEL:662-693-3421 FAX:662-693-3427

●Specifications are subject to change without notice.

Catalog No. ILR-LAP
Printed in Japan [2019.1] 7-003U